ASIAN JOURNAL OF CIVIL ENGINEERING (BUILDING AND HOUSING) VOL. 2, NO. 1, (2001)
PAGES 1-10

EXPERIMENTAL INVESTIGATION OF SMALL-SCALE SHEAR FRAME MODELS WITH TUNED LIQUID COLUMN DAMPERS

*Ch. Adam
Department of Civil Engineering, Technical University of Vienna,
A-1040, Vienna, Austria

ABSTRACT

Results from experimental studies of time-harmonic excited structures with installed Tuned Liquid Column Dampers (TLCDs) are presented. The experimental model consists of a small-scale plane one-story shear frame, made of aluminum, with a TLCD mounted to its rigid beam. A TLCD is a U-shaped tube of constant cross-section, and it is filled with liquid (pure water). The natural frequencies of the shear frame and the TLCD are tuned by modifying the length of the liquid. The effectiveness of TLCDs in the reduction of the dynamic response of structures is demonstrated by means of frequency sweep response functions. The optimal tuning ratio and the optimal geometry of the TLCD container are determined. TLCDs of different shape are studied and subsequently evaluated.

Keywords: tuned liquid column damper, frequency sweep response, optimal tuning ratio, experimental small-scale model

1. INTRODUCTION

Structural vibration control is one of the main goals of civil engineers involved in the structural safety and reliability of buildings. In recent years, several passives, active and hybrid control schemes have been proposed to provide positive control of structural deformation induced by wind and strong ground motion due to earthquakes. Details of these control mechanisms and their applications have been reported in a large number of publications. For a survey of control schemes reported in the literature see [1]. The passive control mechanisms include metallic dampers, friction dampers, viscoelastic dampers, viscous fluid dampers, tuned mass dampers, liquid dampers, smart materials and others, see e.g. reference [2]. Relatively new types of application of passive liquid dampers are Tuned Liquid Column Dampers (TLCDs). A TLCD is a U-shaped tube of uniform cross-section, containing liquid, and its natural frequency is tuned in general to the first natural frequency of the main structure. Vibration energy is transferred from the structure to the TLCD through the motion of the rigid TLCD container exciting the TLCD liquid. The vibrations of the structure are reduced by the TLCD through the gravitational restoring force acting on the displaced TLCD liquid and the energy is dissipated by the viscous Interaction of the TLCD liquid and the rigid TLCD container. TLCDs have some unique

* E-mail address of the author: ca@allmech9.tuwien.ac.at

advantages such as low cost, easy installation and adjustment of liquid frequency, and little maintenance needed, etc. Recently, both analytical and experimental results have been performed in some publications, see e.g. [3-9].

The objective of this paper is to investigate experimentally the influence of TLCDs on the structural response, to illustrate their effectiveness in reducing the response to dynamic loading, and to verify results given in the literature. The small-scale experimental set-up, determination of the system parameters and evaluation of the results are described in detail.

In general the design process of buildings relies on numerical simulations. The corresponding equations of motion of a coupled building - TLCD structure are derived from simplified mechanical models [6,7]. Another aim of this study is to evaluate the results of numerical simulations, and experimental results are set in contrast to numerically derived outcomes.

In the literature many shapes of TLCDs are proposed in an effort to enhance their efficiency in reducing the dynamic response of buildings [4,5,6]. For example, Sadek et al. [6] propose a modified TLCD with a throat in the horizontal tube. In their mechanical model they describe the effect of such a throat with an additional nonlinear velocity dependent "turbulence" damping. In the experiments performed in this paper the effect of such a modified TLCD on the dynamic response of buildings is studied. Thereby, a throat is realized by reducing the cross-section in the center of the horizontal tube. In two different studies 8% and 50% reduces the cross-section, respectively, from its original amount.

2. EXPERIMENTAL SET-UP AND DATA-ACQUISITION

The specimen model studied is depicted in Figure 1, see also [10,11]. It consists of a plane small-scale one-story shear frame with a TLCD mounted to its rigid beam. The columns of the shear frame, represented by leaf springs with rectangular cross-sections (15/2 mm) and of length h = 381 mm, are made of hard aluminum alloy and they are clamped to the horizontal beam. The beam is also composed of aluminum alloy, with a span of 409 mm. The stiffness coefficient and equivalent point mass of the frame are k = 184.5 N/m and m = 2.52 kg, respectively. Thereby, the influence of the P-Δ effect on the experimentally determined stiffness coefficient is included.

Rigidly constructed plastic TLCDs of circular cross-section (inside diameter 28 mm) are mounted to the beam of the structure through a vertical rigid plate made of hard aluminum. Fresh water is used as the TLCD liquid in all experiments. The horizontal tube of the TLCD containers can be replaced easily to examine the effect of different geometry of TLCD containers on the structural response. In order to keep the mass of the structural model constant for all considered configurations an additional mass is attached to the beam, which depends on the actual weight of the TLCD container.

The structural model is carried on an elastic shear frame with columns made of aluminum (15/2 mm). Its horizontal rigid beam is linked to the armature of an electromagnetic shaker, Bruel & Kjær 4808, through a rigid steel bar. The shaker excites the base by a sinusoidal signal provided by the software LabVIEW.

The motion of the support of the structural model is determined by means of a laser transducer (MICRO-EPSILON MESSTECHNIK, Type optoNCDT 1605). The response of the structure's beam is also measured using a laser transducer of the same type. Subsequently all signals are recorded by means of the software BEAM through the board of the Digital Amplifier System DMCplus (Hottinger Baldwin Meßtechnik, HBM). A block diagram of the experimental arrangement and data acquisition is shown in Figure 2.

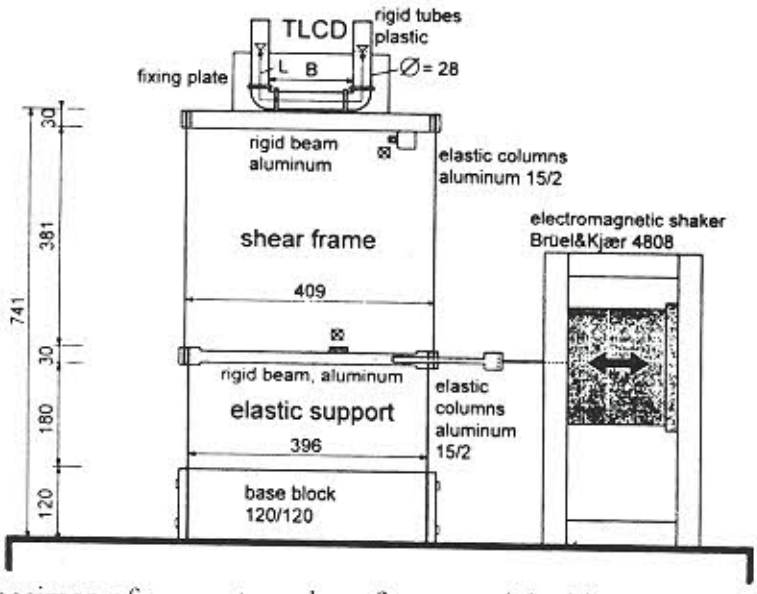

Figure 1 Test specimen of a one-story shear frame model with a Tuned Liquid Column Damper (TLCD) installed to its rigid beam. All dimensions are given in mm.

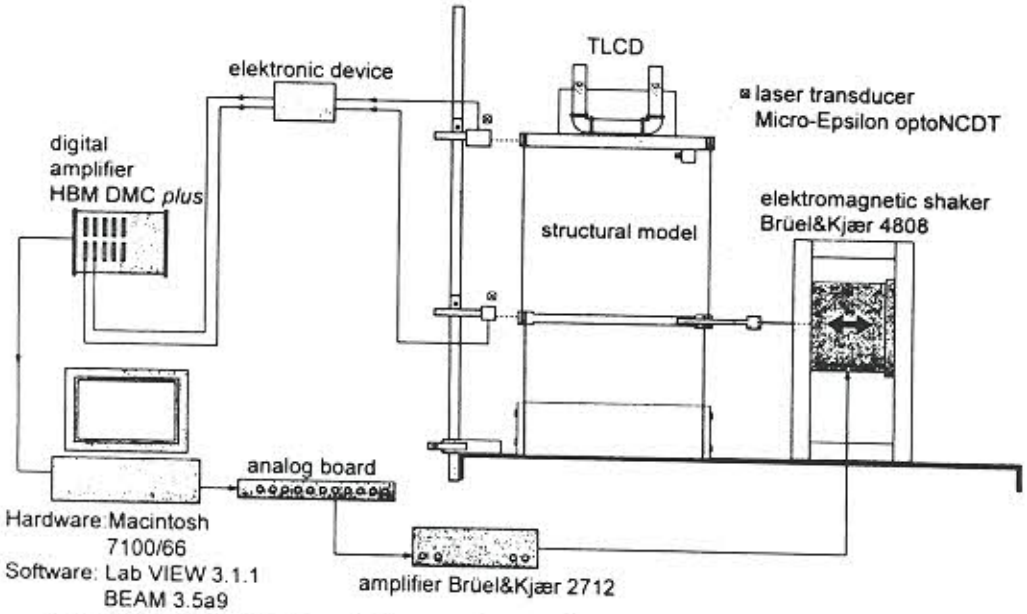

Figure 2 Block diagram of the experimental arrangement and data acquisition.

3. TEST PROCEDURE

Previous to the experiments the dynamic properties of the elastic shear frame without TLCD installed are determined from its free vibration response. During this test the beam of the elastic support is fixed immovable to its initial position. The beam of the shear frame is given an initial

displacement, subsequently released and its decay of oscillation is monitored. Transformation of the free vibration response into the frequency domain renders the natural frequency of the shear frame $f_0^S = 1.36$ Hz. From the decay rate follows a viscous damping coefficient ζ_S of 0.0015. The damping coefficients of the TLCDs (not attached to shear frame) are also determined from their free vibration response. A ball of polystyrene with a diameter of 25 mm is placed to one end of the liquid. The ball is given an initial displacement, released and the ensuing vibration of the liquid is measured via the displacement of the ball. Since the decay rate of the liquid column depends on the initial displacement, actual amplitude of vibration and dimension of the TLCD only the mean of the viscous damping coefficient for all TLCDs is specified: $\zeta_T = 0.061$. However, the deviation of the actual (amplitude depending) damping coefficient from this value lies within narrow bounds.

A series of harmonic excitation tests with differently assigned excitation frequencies are performed in order to characterize and quantify the influence of the TLCD on the structural response. A sinusoidal excitation is generated in the computer, amplified and switched on to the electromagnetic shaker. The support of the shear frame is excited, sweeping the frequencies between 1.0 and 1.7 Hz. Relating the amplitudes of the steady-state response to the amplitudes of the shaker results in the amplitude frequency response function (frequency sweep response). In the experiments, the natural frequency f_0^T of the TLCD is tuned to the natural frequency f_0^S of the shear frame. According to [4,6,7] f_0^T depends only on the overall length L of the liquid column and gravitational acceleration g.

$$f_0^T = \frac{1}{2}\pi\sqrt{\frac{2}{L}} \tag{1}$$

While in the first series of experiments the horizontal column length B remains constant the overall length L of the liquid column is varied. In a second series of dynamic tests B is varied while the overall liquid column length L remains constant. B is an important interaction parameter for the transfer of energy between the structure and the TLCD but it does not alter the natural frequency of the TLCD.

Subsequently, experimental results are set in contrast to numerically derived outcomes. The equations of motion of the mechanical model as shown in Figure 3 subjected to harmonic ground motion $W_g = a_0 \sin \nu t$ read as follows [6].

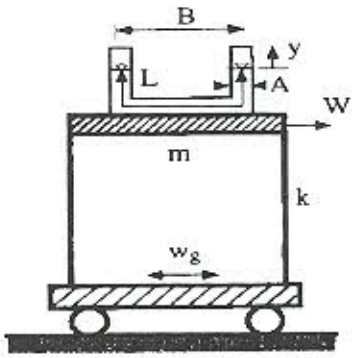

Figure 3 Mechanical model of the test specimen

$$(m + \rho AL)\ddot{W} + \rho AB\ddot{y} + 2m\,\omega_0^S\,\zeta_S\,\dot{W} + k\,W = -2m\,\omega_0^S\,\zeta_S\,\dot{w}_g - k \quad , \tag{2}$$

$$\rho AB\,\ddot{W} + \rho AL\,\ddot{y} + 2\rho AL\omega_0^T\,\zeta_T\,\dot{y} + 2\rho Ag\,y = 0 \ . \tag{3}$$

Where W is the absolute displacement of the beam of the shear frame and y is the vertical displacement of the liquid column. A dot indicates differentiation with respect to the time. ρ Denotes the mass density of water (1000 kg/m^3), A shows the cross-sectional area of the tube and $\omega_0^S = 2\pi f_0^S$, $\omega_0^T = 2\pi f_0^T$. ν is the excitation circular frequency and a_0 the amplitude of the excitation signal. Equations (2&3) are solved numerically by means of the software package Mathematical 4.0.

4. RESULTS AND DISCUSSION

TLCD effectiveness is most easily demonstrated by comparing the frequency sweep response of the shear frame structure with and without TLCD installed, as shown in Figure 4. In this graph the amplitude ratio is the ratio of the dynamic amplitude of total deflection of the shear frame to the amplitude of motion of the base. The response of the shear frame without a TLCD installed displays the typical characteristics of a single-degree-of-freedom system, with a single peak amplitude ratio occurring at the natural frequency of the shear frame (primary structure). While the magnitude of the peak amplitude ratio would theoretically be $1/2\,\zeta_S = 333$ a peak amplitude ratio of approximately 328 is reached.

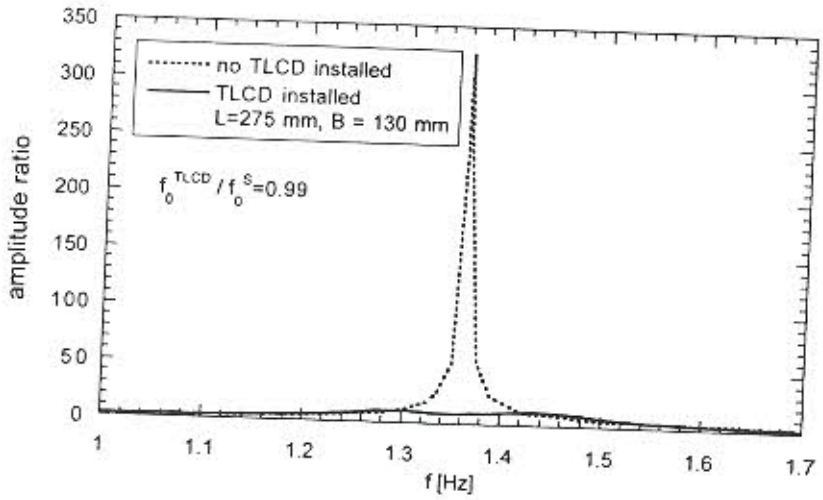

Figure 4 Amplitude ratio of total deflection of the beam with respect to the deflection of the base. Structure without and with TLCD installed.

The frequency sweep response of the shear frame with a TLCD installed characteristically experiences two peak amplitude ratios, one occurring at an excitation frequency less than the natural frequency of the primary structure, the other occurring at an excitation frequency greater

It is noted that the described experiments were performed at different levels of excitation, however, the frequency sweep response related to amplitude of excitation varied within narrow bounds, i.e. less than 2%.

In addition, for two configurations of TLCDs (B = 130 mm, and L = 275 mm or L = 250 mm respectively) the frequency sweep response is also derived numerically. In Figures 7 and 8 the numerical outcomes from the mechanical model are set in contrast to the corresponding results from experiments. It can be seen that the course as well as the peak of the amplitude frequency response function is well approximated by means of the numerical results.

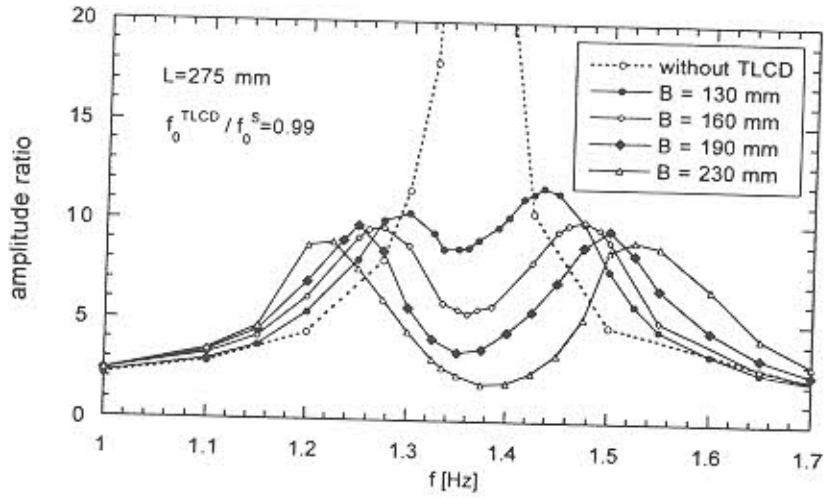

Figure 6 Amplitude ratio of total deflection of the beam with respect to the deflection of the base. Different TLCD configurations: overall length L of the liquid column remains constant, horizontal length B of the liquid column is varied.

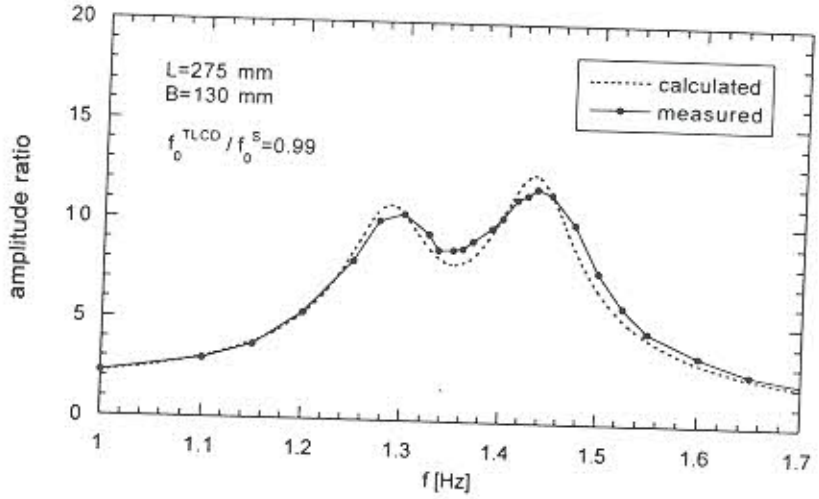

Figure 7 Amplitude ratio of total deflection of the beam with respect to the deflection of the base. Experimental results versus numerically derived results

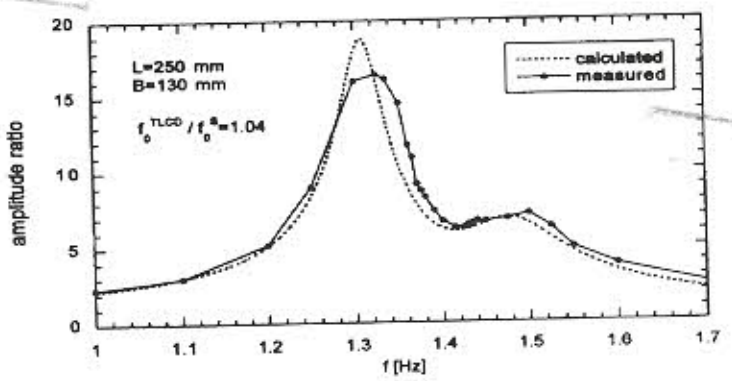

Figure 8 Amplitude ratio of total deflection of the beam with respect to the deflection of the base. Experimental results versus numerically derived results.

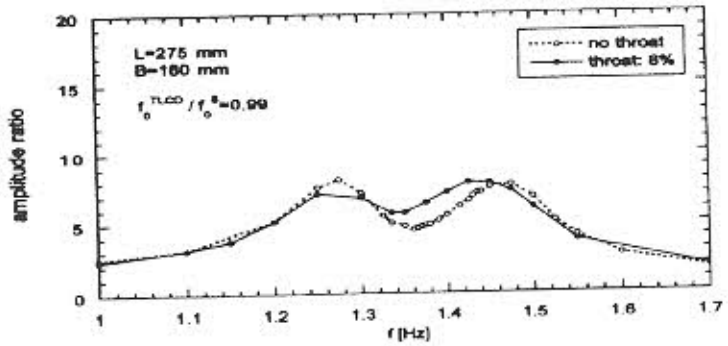

Figure 9 Amplitude ratio of total deflection of the beam with respect to the deflection of the base. Classical TLCD (no throat) and, alternatively, modified TLCD (with throat, reduction of the cross-section in the center of the horizontal tube by 8%) installed.

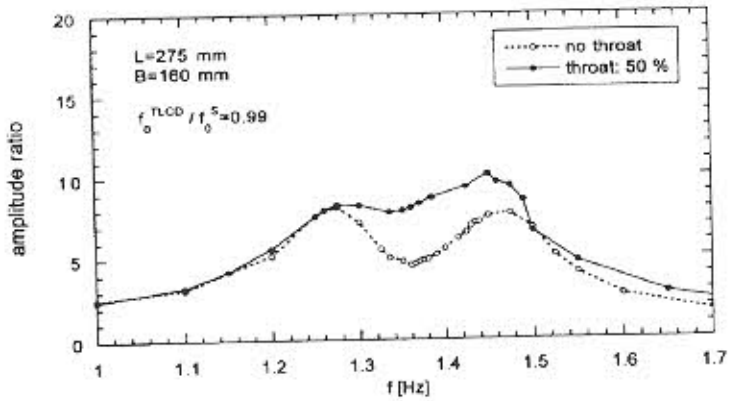

Figure 10 Amplitude ratio of total deflection of the beam with respect to the deflection of the base. Classical TLCD (no throat) and, alternatively, modified TLCD (with throat, reduction of the cross-section in the center of the horizontal tube by 50%) installed.

Furthermore, the effect of a throat in the horizontal tube of the TLCD is studied. Figure 9 includes the related dynamic sweep response of the experimental model with classical TLCD (constant cross-section throughout the container), and alternatively with modified TLCD (with throat) installed. Thereby, in the modified TLCD the cross-section in the center of the horizontal is reduced by 8% from its original amount by means of a small plate of circular shape. From Figure 9 it can be observed that no improvement of the damper efficiency when modified by means of a throat is visible. This outcome is supported by the results of Figure 10, which are derived from an experimental set-up, where the cross-section of the modified TLCD is reduced by 50%.

As shown in Figure 11 the response of the structure with modified TLCD installed depends very strong on the amplitude of excitation. Thus, it seems that a TLCD with throat as proposed in the literature, see e.g. [6], does not increase the dynamic performance of a building. In some cases the dynamic response is larger compared to a building with a classical TLCD attached. However, a final view of this special kind of TLCDs can be done after large-scale experimental tests.

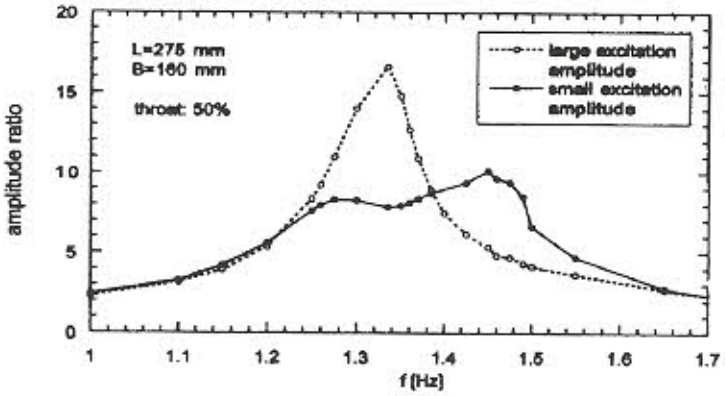

Figure 11 Amplitude ratio of total deflection of the beam with respect to the deflection of the base. Modified TLCD (with throat) installed. 2 magnitudes of excitation.

5. CONCLUSIONS

A small-scale experimental set-up has been developed in an effort to study the effect of Tuned Liquid Column Dampers (TLCDs) on the dynamic response of structures. Experimental investigations on small-scale models are cheap when compared to full-scale tests, and hence, mechanical models for numerical analyses can be verified easily. In the particular studies of this paper, the response of a small-scale shear frame with different TLCD configurations installed is investigated in frequency sweep experiments. Factors are determined which effect the characteristics of TLCDs on the structural response. For TLCDs with mass ratios of approximately 7%, the most favorable vibration mitigation of the shear frame is approached for a particular TLCD configuration when the TLCD natural frequency is approximately 99% of the primary structure natural frequency. The numerical solution of the equations of motion leads to

reliable results. A TLCD container modified by means of a throat in the horizontal tube was tested and found not to be favorable in reducing the dynamic response of buildings.

Acknowledgements: Grants through the *Hochschuljubiläumstiftung der Stadt Wien* and through the *Vienna University of Technology "Reserve nach §17(6) UOG 93 / Innovation"* are acknowledged for making the experimental equipment available. The author is grateful to Dipl.-Ing. M. Kofler for performing the experiments. Special thanks are given to Ao.Univ.Prof. Dr. R. Heuer, Dipl.-Ing. M.J. Hochrainer and Dipl.-Ing. A. Hruska for their contributions.

REFERENCES

1. Houssner, G.W., Bergman, L.A., Caughey, T.K., Chassiakos, A.G., Claus, R.O., Masri, S.F., Skelton, R.E., Soong, T.T., Spencer, B.F. and Yao, J.T.P., Structural control: past, present, and future, *Journal of Engineering Mechanics* **123** (1997), 897-971.
2. Soong, T.T. and Dargush, G.F., *Passive Energy Dissipation Systems in Structural Engineering*, Wiley, Chichester, 1997.
3. Balendra, T., Wang, C.M. and Cheong, H.F., Effectiveness of tuned liquid column dampers for vibration control of towers, *Engineering Structures* **17** (1995), 668-675.
4. Hitchcock, P.A., Kwok, K.C.S., Watkins, R.D. and Samali, B., Characteristics of liquid column vibration absorbers (LCVA) – I, *Engineering Structures* **19** (1997), 126-134.
5. Hitchcock, P.A., Kwok, K.C.S., Watkins, R.D. and Samali, B., Characteristics of liquid column vibration absorbers (LCVA) – II, *Engineering Structures* **19** (1997), 135-144.
6. Sadek, F., Mohraz, B. and Lew, H.S., Single- and multiple-tuned liquid column dampers for seismic applications, *Earthquake Engineering and Structural Dynamics* **27** (1998), 439-463.
7. Chang, C.C., Mass dampers and their optimal designs for building vibration control, *Engineering Structures* **21** (1999), 454-463.
8. Adam, C., Hruska, A. and Kofler, M, Elastic structures with tuned liquid column dampers, *Proc XVI IMEKO WORLD CONGRESS*, September 25-28, 2000, Vienna, Austria, (Afjehi, A., Durakbasa, M.N., Osanna, P.H., eds), Volume VII, pp. 351-356.
9. Hochrainer, M.J., Adam, C., and Ziegler, F. Application of tuned liquid column dampers for passive structural control. In: *Proc. of 7th International Congress on Sound and Vibration* (ICSV 7), July 4 - 7, 2000, Garmisch-Partenkirchen, Germany (Guidati, G., Hunt, H., Heller, H., Heiss, A., eds), CD-ROM paper, paper no 393, pp. 3107-3114. München: KRAMER Technology Publishing.
10. Hruska, A., *Elastic Shear Frames with Tuned Liquid Column Dampers - a Computer Controlled Study of Small-Scale Models* (in German), Master's Thesis, Technical University of Vienna, Vienna, Austria, 1999.
11. Kofler, M., *Experimental and Numerical Investigation of Small-Scale Shear-Frames with Tuned Liquid Column Dampers* (in German), Master's Thesis, Technical University of Vienna, Vienna, Austria, 2000.